KMU410 KELOX-ULTRAX coupling 50/40

71100HG0

Areas of application

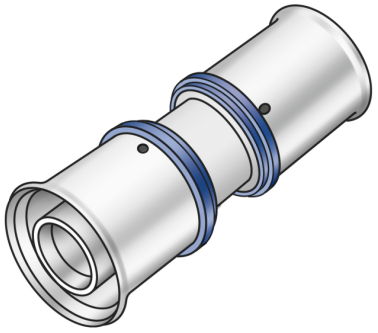

Press coupling equal or reduced, made of non-porous metallized brass, incl. support sleeves with O-rings and steel or stainless steel press-fit sleeves, "leak before pressed"

Approvals:

Specifications

Article information	
port 1	Pressing socket
port 2	Pressing socket
execution	1-part
design	Straight
press contour	U

Technical properties	
maximum working pressure at 20 ° C	10

Product information	
VPE1	1 SA1
VPE2	12 KT1
weight	0,453 KGM
text	KELOX-ULTRAX coupling
INTRNR	74122000
main material group	KELOX
material group	KELOX-ULTRAX metal fittings
code	KMU410

KE KELIT GmbH
A 4020 Linz, Ignaz-Mayer-Straße 17, Austria, Europe
PHONE +43 (0) 50 779 **E-MAIL** office@kekelit.com
www.kekelit.com

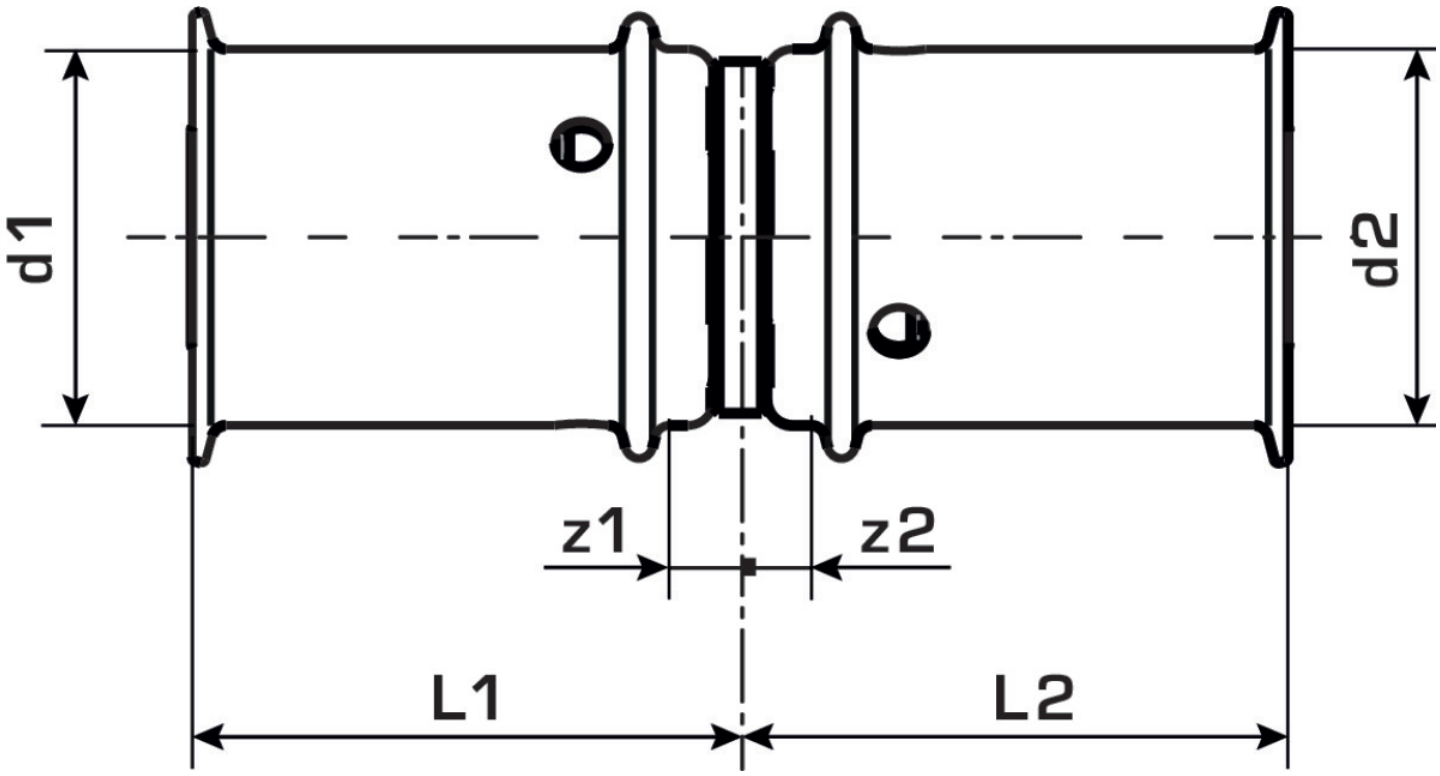

Art. No	label	d1 mm	d2	L1	L2	z1	z2
71100HG0	50/40	50	40	56	55	8	8

KE KELIT GmbH
A 4020 Linz, Ignaz-Mayer-Straße 17, Austria, Europe
PHONE +43 (0) 50 779 **E-MAIL** office@kekelit.com
www.kekelit.com